Flo Wall

LUMINA

Design: Foster + Partners, 2013

High CRI | Kelvin 3000 | A++

LED wall lamp, in varnish coated aluminium and steel.
Head rotates by 300°, arm pivots by 90°+ 90°.
3W-LED which you can switch on with one click for full light intensity, with two clicks for half light intensity.

Finishing

Standard

Black soft touch
cod. 97501ST00

Matt white
cod. 97502OP00

Brushed nickel
cod. 9754400

Special

Matt red
cod. 97503OP00

Matt yellow
cod. 97505OP00

Metallic bronze
cod. 97529MT00

Gunmetal
cod. 9753200

All RAL coating and galvanic finishes available upon request

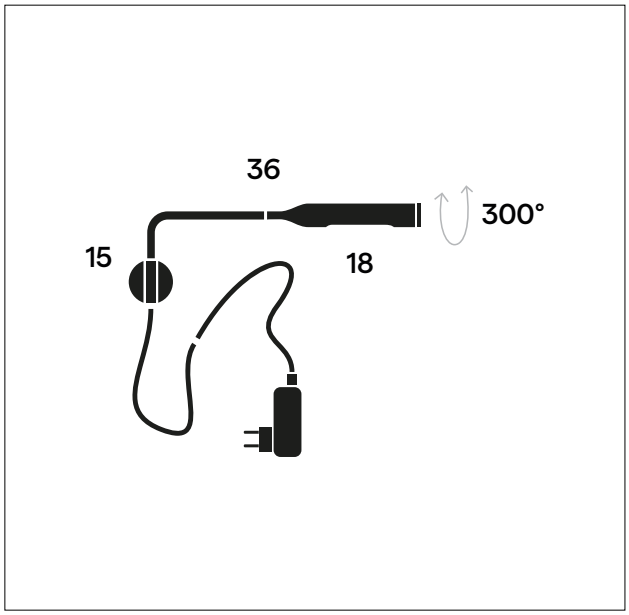

Light emission

- Light emission: diffuse
- Light direction: downlight
- Light source: led board
- Source flux: 270 lm
- Emitted flux: 150 lm
- Efficacy: 30 lm/W
- CCT: 3000K
- CRI index: >90
- LLMF: 50000 h L70

Electrical Facts

- Source power: 3 W
- Power absorbtion: 5 W
- Stand-by absorbtion: < 1 W
- Grid voltage: 100 – 240 V AC / 50-60 Hz
- Power supply: multiplug AC-DC converter provided
- Dimmability: internal push dimmer
- Energy class: A++

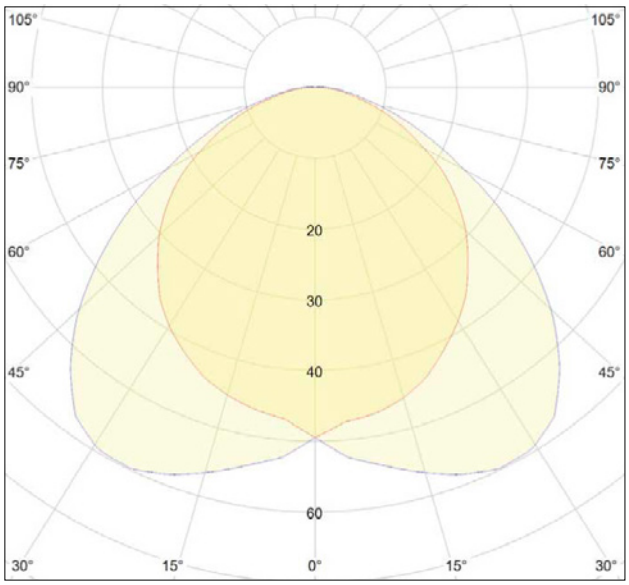

Technical data

- Environment: indoor
- Placement: wall
- Net weight: 0,55 Kg
- Certifications: CE
- Suggested ambient T: 25°C
- Maximum ambient T: 40°C
- Insulation class: III
- Protection class: IP20

Packaging	Gross weight
cardboard box 50 x 31 x 8 (cm) 0,012 m³	1,1 Kg

Lumina Italia srl reserve the right to change light fixture features without notice - for updated infos, please visit our site www.lumina.it

Flo Wall

LUMINA

Design: Foster + Partners, 2013

High CRI | Kelvin 2700 | A++

LED wall lamp, in varnish coated aluminium and steel.
Head rotates by 300°, arm pivots by 90°+ 90°.
3W-LED which you can switch on with one click for full light intensity, with two clicks for half light intensity.

Finishing

Standard

Black soft touch
cod. 97501STK27

Matt white
cod. 97502OPK27

Brushed nickel
cod. 97544K27

Special

Matt red
cod. 97503OPK27

Matt yellow
cod. 97505OPK27

Metallic bronze
cod. 97529MTK27

Gunmetal
cod. 97532K27

All RAL coating and galvanic finishes available upon request

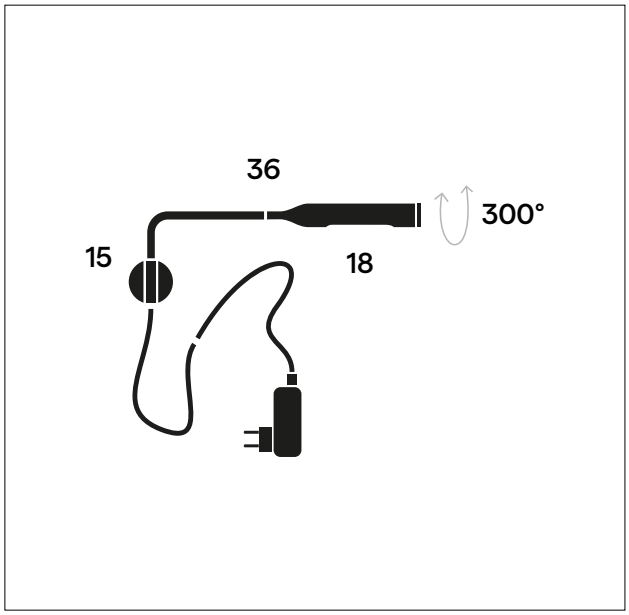

Light emission

- Light emission: diffuse
- Light direction: downlight
- Light source: led board
- Source flux: 250 lm
- Emitted flux: 140 lm
- Efficacy: 28 lm/W
- CCT: 2700K
- CRI index: >90
- LLMF: 50000 h L70

Electrical Facts

- Source power: 3 W
- Power absorbtion: 5 W
- Stand-by absorbtion: < 1 W
- Grid voltage: 100 – 240 V AC / 50-60 Hz
- Power supply: multiplug AC-DC converter provided
- Dimmability: internal push dimmer
- Energy class: A++

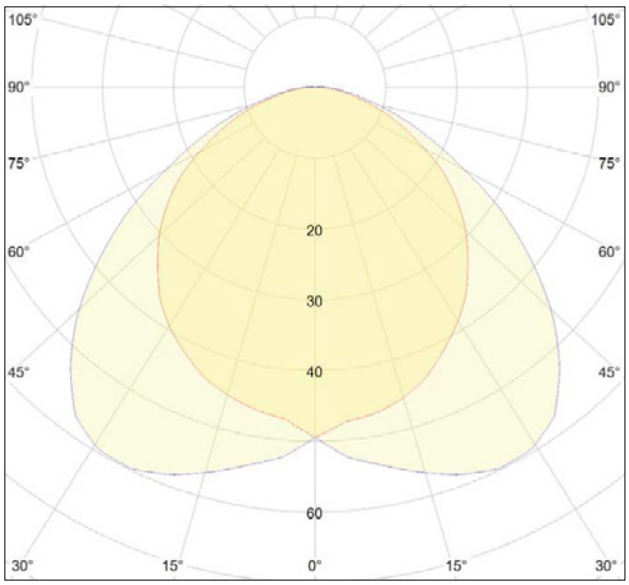

Technical data

- Environment: indoor
- Placement: wall
- Net weight: 0,55 Kg
- Certifications: CE
- Suggested ambient T: 25°C
- Maximum ambient T: 40°C
- Insulation class: III
- Protection class: IP20

Packaging	Gross weight
cardboard box 50 x 31 x 8 (cm) 0,012 m³	1,1 Kg

Lumina Italia srl reserve the right to change light fixture features without notice - for updated infos, please visit our site www.lumina.it